570C-3P & 570C-4P

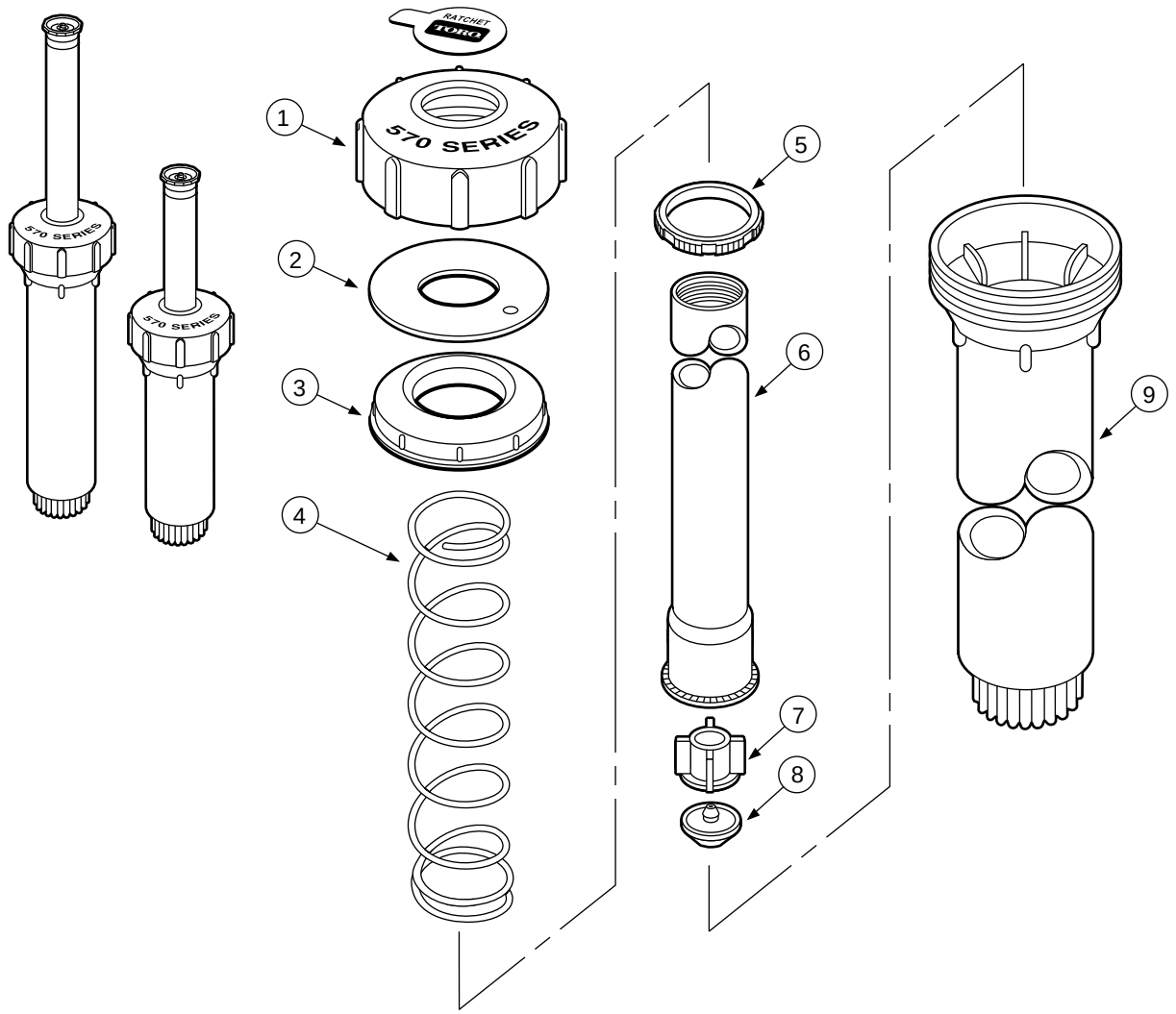

Item No.	Part No.	Nomenclature	Quantity Per Assy.
1	35-3074	Cap	1
2	35-3078	Seal, Cap	1
3	35-3076	Retainer, Seal	1
4	35-4879	Spring, Return, 3-P	1
4	35-9631	Spring, Return, 3-P, COM	1
4	35-3077	Spring, Return, 4-P	1
4	35-9632	Spring, Return, 4-P, COM	1
5	89-0463	Retainer, Spring	1
6	89-0967	Riser, 3-P	1
6	89-0969	Riser, 4-P	1
7	89-5647	Housing, COM	1
8	89-5648	Seat, COM	1
9	89-0966	Body, 3-P	1
9	89-0968	Body, 4-P	1
		SERVICE PARTS AND ASSEMBLIES	
	35-3089	Cap Assy. (Includes Items 1-3)	
	89-5896	COM Assy. (Includes Items 7 & 8)	

570C-6P

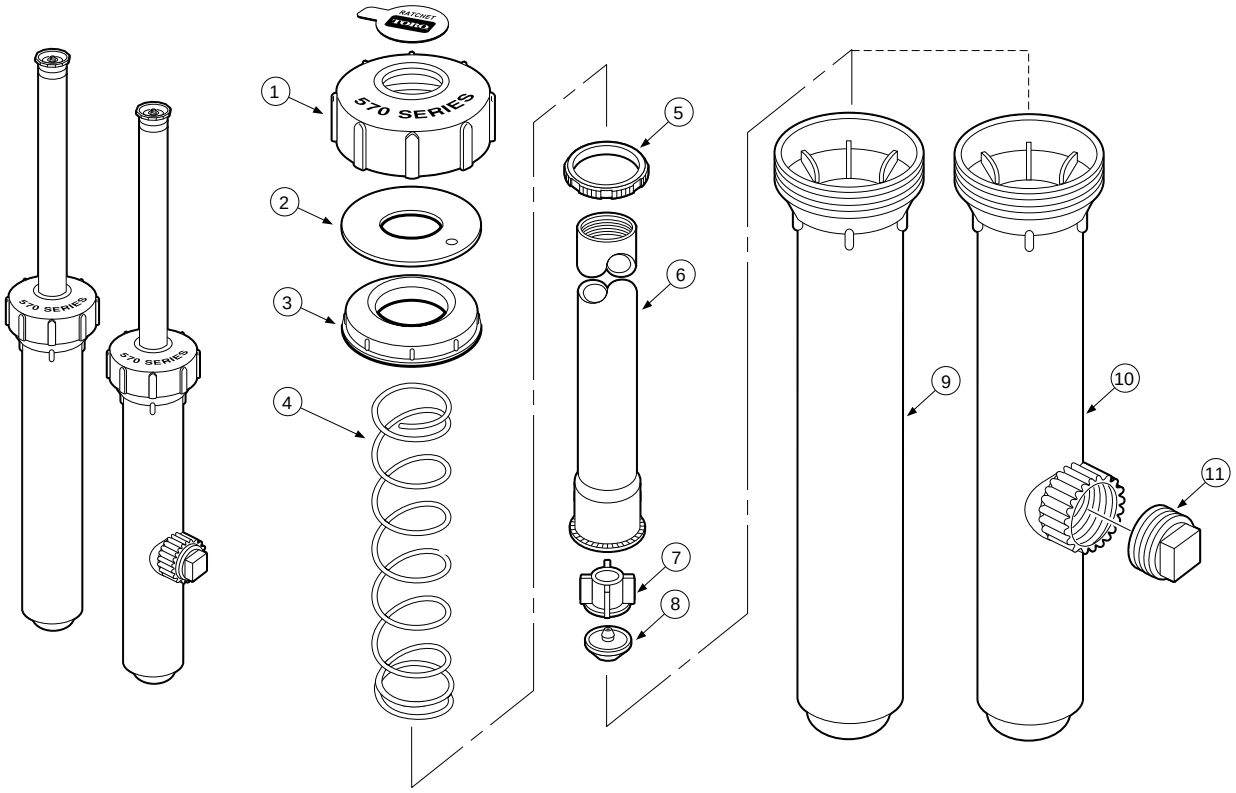

Item No.	Part No.	Nomenclature	Quantity Per Assy.
1	35-3074	Cap	1
2	35-3078	Seal, Cap	1
3	35-3076	Retainer, Seal	1
4	35-4874	Spring, Return	1
4	35-9633	Spring, Return, COM	1
5	89-0463	Retainer, Spring	1
6	89-0856	Riser	1
7	89-5647	Housing, COM	1
8	89-5648	Seat, COM	1
9	89-0970	Body	1
10	89-1245	Body, SI	1
11	363-3125	Plug, 1/2" NPT, SI	1
		SERVICE PARTS AND ASSEMBLIES	
	35-3089	Cap Assy. (Includes Items 1-3)	
	89-5896	COM Assy. (Includes Items 7-8)	

570C-12P

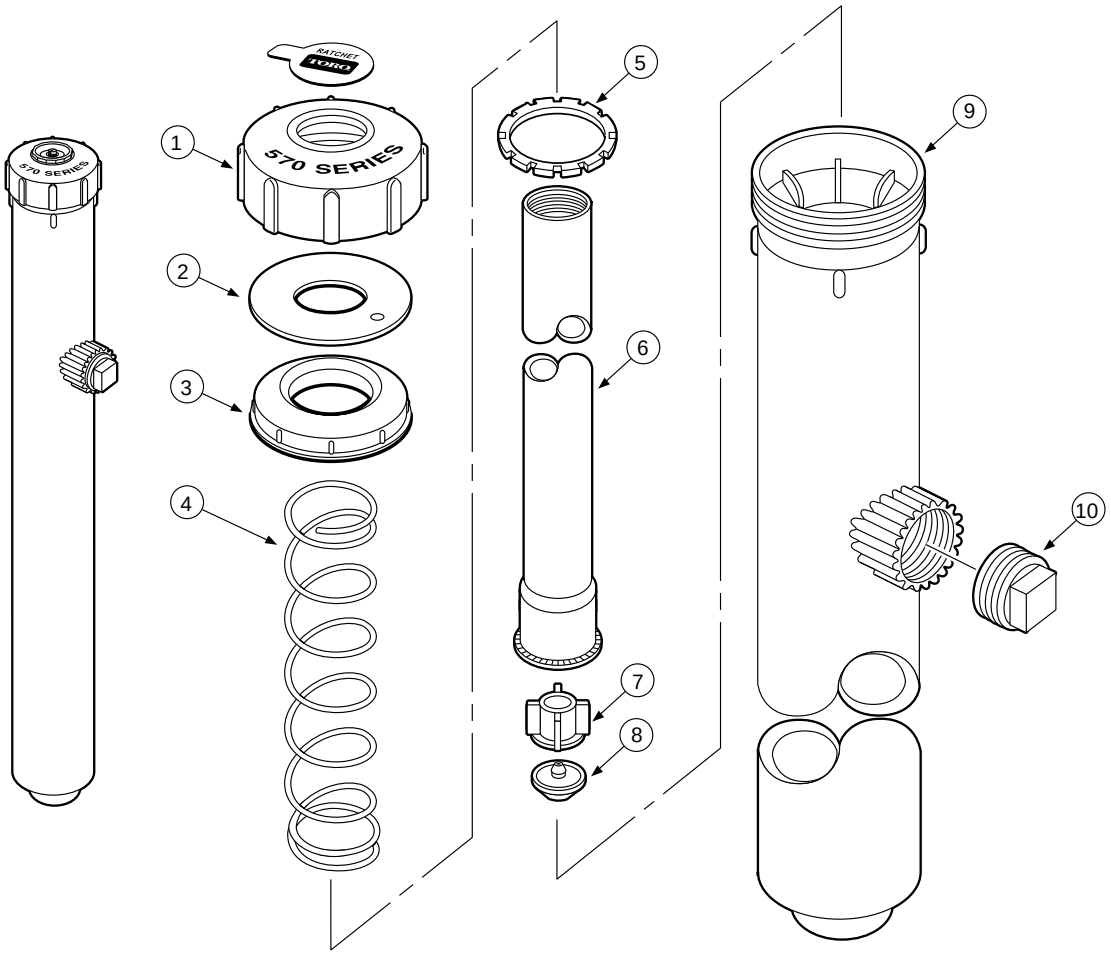

Item No.	Part No.	Nomenclature	Quantity Per Assy.
1	35-3074	Cap	1
2	35-3078	Seal, Cap	1
3	35-3076	Retainer, Seal	1
4	35-6872	Spring, Return	1
4	35-9634	Spring, Return, COM	1
5	89-0433	Ratchet, SI	1
6	89-0957	Riser	1
7	89-5647	Housing, COM	1
8	89-5648	Seat, COM	1
9	35-9322	Body, 12P, SI	1
10	363-3125	Plug, 1/2" NPT, SI	1
		SERVICE PARTS AND ASSEMBLIES	
	35-3089	Cap Assy. (Includes Items 1-3)	
	89-5896	COM Assy. (Includes Items 7 & 8)	