Vari-Time 4000 Satellite, Electric (Sheet 3 of 6)

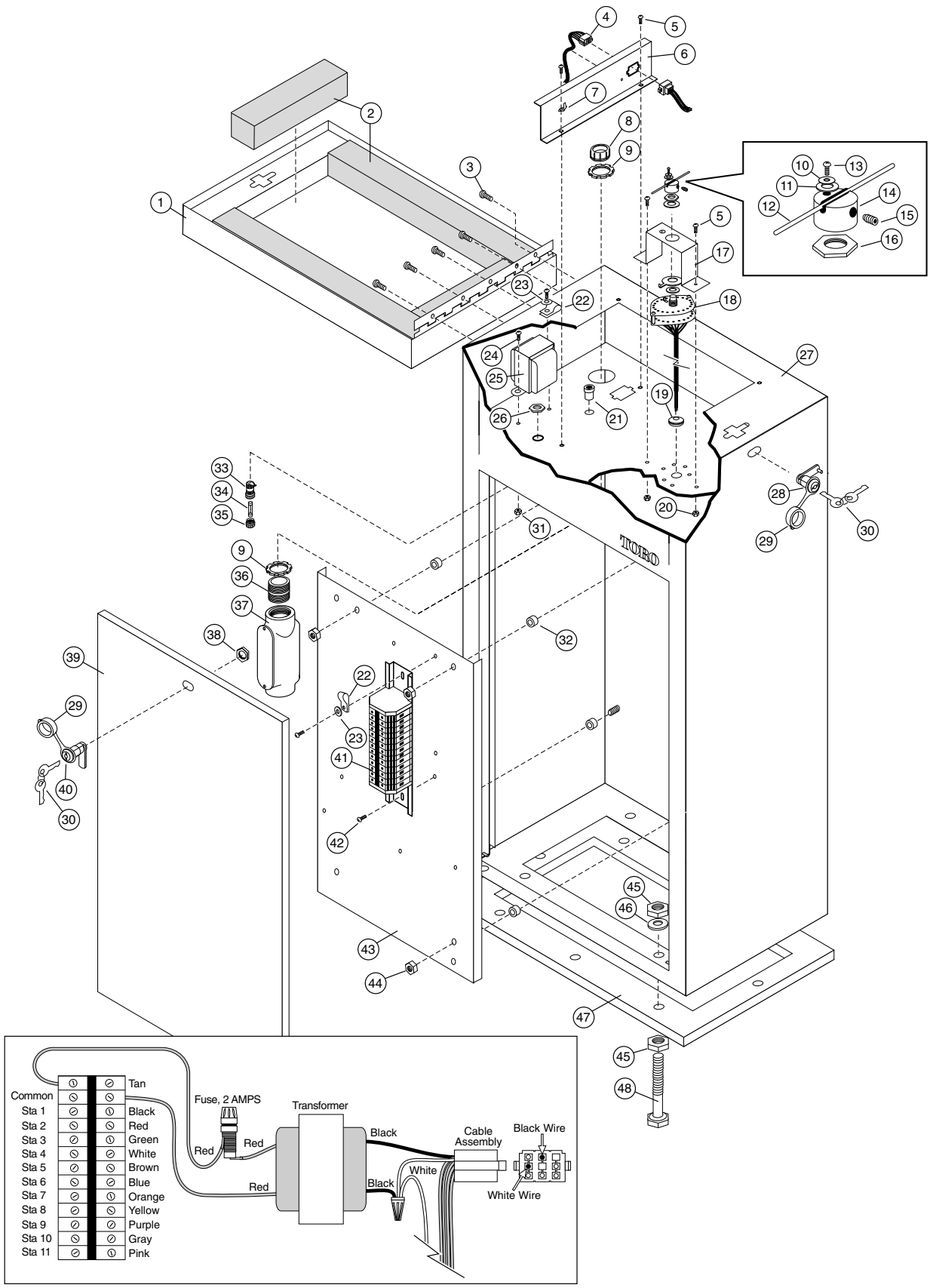

Item No.	Part No.	Description	Quantity Per Assy.
1	9-1017	Lid, Pedestal	1
2	9-2105	Block, Foam	4
3	1-3076	Screw, 6-32 x 5/8"	5
4	9-4793	Wire Plug Assy.	1
5	4-1063	Screw, #6, Tap	4
6	- - - - - - -	Divider (See Service Item 9-4990)	1
7	- - - - - - -	Male Terminal	1
8	1-7417	Bushing, Insulator, 1"	1
9	1-7384	Nut, Lock, Conduit Box, 1"	2
10	1-3087	Washer, #4, Brass	1
11	1-3172	Washer, #10, Brass	1
12	1-7093	Wire, Drive	1
13	1-3082	Screw, 4-40 x 1/4", Machine	1
14	1-7203	Hub, Selector Switch	1
15	1-7038	Screw, 6-32 x .44"	1
16	- - - - - - -	Hex Nut, Lock, Selector Switch	1
17	1-7047	Bracket, Selector Switch	1
18	1-7062	Selector Switch, Rotary (Includes Item 16)	1
19	1-7114	Grommet, Rubber Craft	1
20	360-0151	Nut, 6-32 w/ Lock Washer	2
21	1-7346	Bushing, Nylon, Snap	1
22	1-7176	Clamp Cable	2
23	363-3206	Washer, #8, Flat	1
24	360-0248	Screw, 8-32 x 1/2"	2
25	35-3143	Transformer Assy., 120/24 V a.c., Electric, Domestic and CSA	1
25	9-4022	Transformer Assy., 240/24 V a.c., Electric, Export	1
26	- - - - - - -	Hex Nut, Lock, Fuse Holder	1
27	89-0385	Housing, Pedestal	1
28	9-1695	Lock, Pedestal Lid (Includes Item 38)	1
29	9-4303	Cover, Lock	2
30	360-0565	Key, Lock	1
31	360-0249	Hex Nut, 8-32	2
32	1-1108	Retainer, Tube	4
33	1-3061	Holder, Fuse (Includes Item 26 & 35)	1
34	360-0211	Fuse, 2 Amps	1
35	- - - - - - -	Cover, Fuse Holder	1
36	1-7383	Nipple, Galvanize, 1"	1
37	1-7382	Conduit Box, 1"	1
38	- - - - - - -	Hex Nut, Lock	1
39	9-1018	Door, Pedestal	1
40	360-0583	Lock, Pedestal Door (Includes Item 38)	1
41	363-2518	Terminal Block, 13 Points	1
42	360-0136	Screw, #8, Tap	2
43	35-2151	Rear Mounting Plate	1
44	360-0594	Hex Nut, 1/4-20, UNC-2B	4
45	363-1684	Hex Nut, 8-18 x 5/16"	8
46	363-1683	Washer, Flat, 5/16"	4
47	9-1051	Mounting Template	1
48	363-1686	Screw, Cap, 5/16" x 4"	4
		SERVICE PARTS AND ASSEMBLIES	
	360-0565	Keys, Two w/Ring (Golf #1382)	
	9-4990	Pedestal Divider Assy. (Includes Items 5, 6, 22 & 23)	
	9-4794	Transformer Assembly, 240/24 V a.c., (Includes Items 4–6 & 22–25)	
	9-3159	Wire Hub Assembly, Electric (Includes Items 10–16)	
	1-7359	Rotary Switch Assy. (Includes Items 5, 17 & 18)	
	9-1695	Lock Assembly, Lid (Includes Items 28–30)	
	9-5154	Fuse Holder Assy. (Includes Items 26 & 33–35)	
	9-6576	Kit Accessory, VT Satellite (Includes Items 45–48)	

Vari-Time 4000 Satellite, Hydraulic (Sheet 4 of 6)

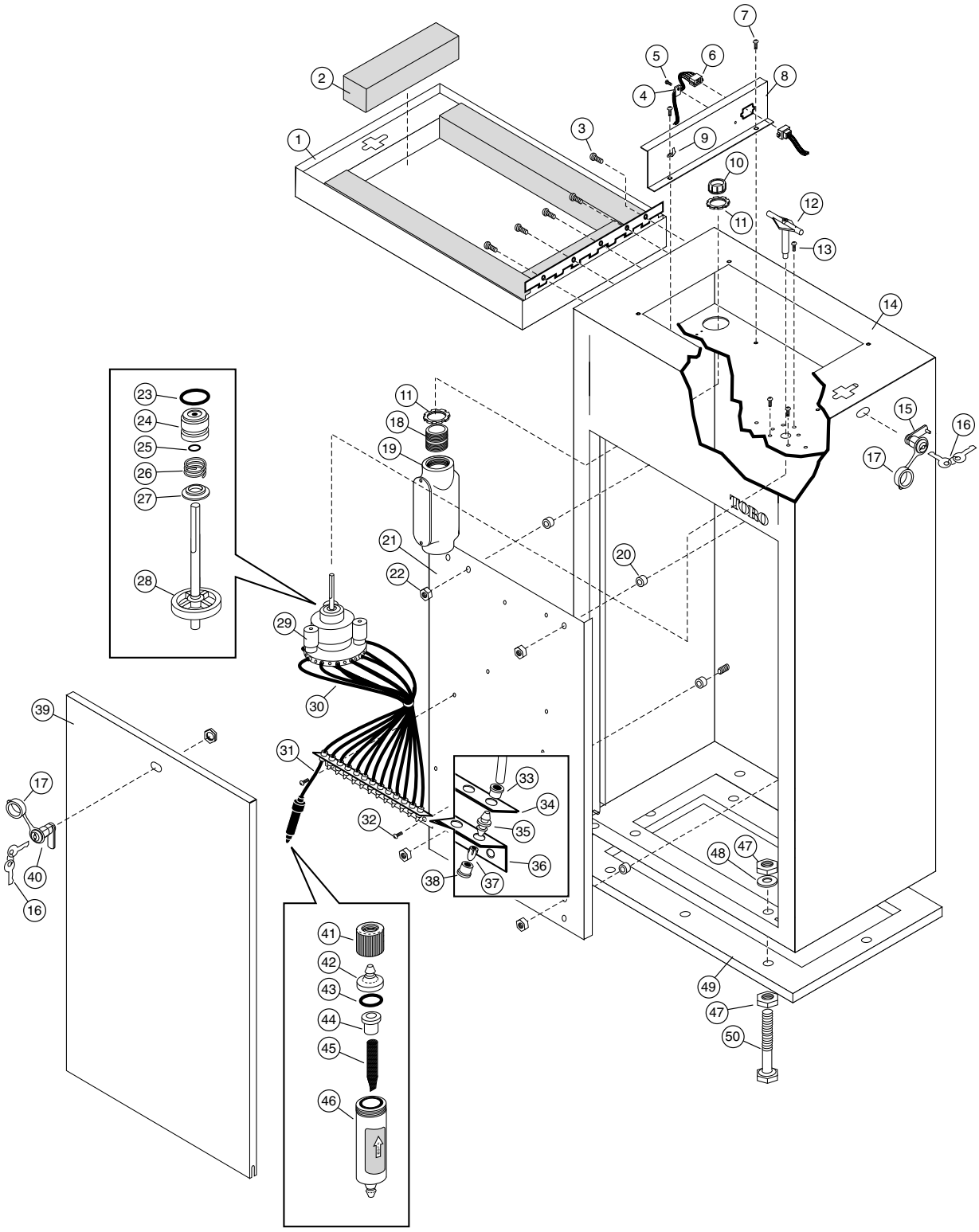

Item No.	Part No.	Description	Quantity Per Assy.
1	9-1017	Lid, Pedestal	1
2	9-2105	Block Foam	4
3	1-3076	Screw, 6-32 x 5/8"	5
4	1-7176	Clamp, Cable	1
5	4-1063	Screw, #6, Tap	3
6	9-4780	Cable Assembly, VT	1
7	4-1063	Screw, #6, Tap	2
8	- - - - - - -	Divider (See Service Item 9-4990)	1
9	- - - - - - -	Male Terminal	1
10	1-7417	Bushing, Insulation	1
11	1-7384	Nut, Lock, Galvanized	2
12	9-3976	Tee Handle	1
13	360-0297	Screw, Tap	3
14	89-0385	Housing, Pedestal	1
15	360-0583	Lock, Lid	1
16	360-0565	Key, Lock	2
17	9-4303	Cover, Lock	2
18	1-7383	Nipple, 1" NPT, Galvanized	1
19	1-7382	Conduit Box	1
20	1-1108	Tube Retainer	4
21	35-2151	Mounting Plate, Rear	1
22	360-0594	Nut, 1/4-20	4
23	102-0040	O-Ring, .070 x .801 x .941, Red	1
24	9-4605	Plug Assembly, PV	1
25	2-9654	O-Ring, .070 x .176 x .316	1
26	9-3428	Spring, Valve Disk	1
27	9-3427	Thrust Washer	1
28	9-3423	Shaft and Disk, 11 Station	1
29	9-3416	Valve Body, 11 Station	1
30	9-2946	Tubing, Poly, 3/16" x 11"	13
31	9-3325	Tubing, 1/4" x 3"	1
32	4-1063	Screw, #6, Tap	2
33	1-1108	Tube Retainer	15
34	9-4295	Clamp Plate, Rack	1
35	1-1107	Coupler, Poly	13
36	- - - - - -	Tube Rack Assy. (See Service Parts)	1
37	89-8157	Cap, Poly, 1/4",	13
38	*1-1108	Tube Retainer	13
39	9-1018	Door, Pedestal	1
40	360-0583	Lock, Door	1
41	9-8276	Collar, Filter	1
42	35-9948	Filter Cap w/ Fitting, 1/4"	1
43	360-0487	O-Ring, Filter	1
44	9-8279	Mount, Filter Screen	1
45	9-6415	Filter Screen, Fine Mesh	1
46	35-9948	Filter Body, 1/4"	1
47	363-1684	Hex Nut, 8-18 x 5/16"	8
48	363-1683	Washer, Flat, 5/16"	4
49	9-1051	Mounting Template, Plastic	1
50	363-1686	Screw, Cap, 5/16" x 4"	4
		SERVICE PARTS AND ASSEMBLIES	
	360-0565	Keys, Two w/Ring (Golf #1382)	
	9-4990	Divider Assy., Pedestal (Includes Items 4, 5, 7 & 8)	
	9-1695	Lock Assy., Lid (Includes Items 15–17)	
	9-3981	Selector Valve and Shaft Assy. (Includes Items 23–29)	
	9-3171	Tube Rack Assy.(Includes Items 34–36)	1
	9-8364	Filter Assembly, 1/4" (Includes Items 41–46)	
	9-4805	Selector Valve, Tube Rack and Filter Assembly (Includes Items 23–38 & 41–46)	
	9-6576	Kit Accessory, VT Satellite (Includes Items 47–50)	
		* Order Through Finished Goods Distribution - Minneapolis	

Vari-Time 4000 Satellite -Wall Mount Cabinet (Sheet 5 of 6)

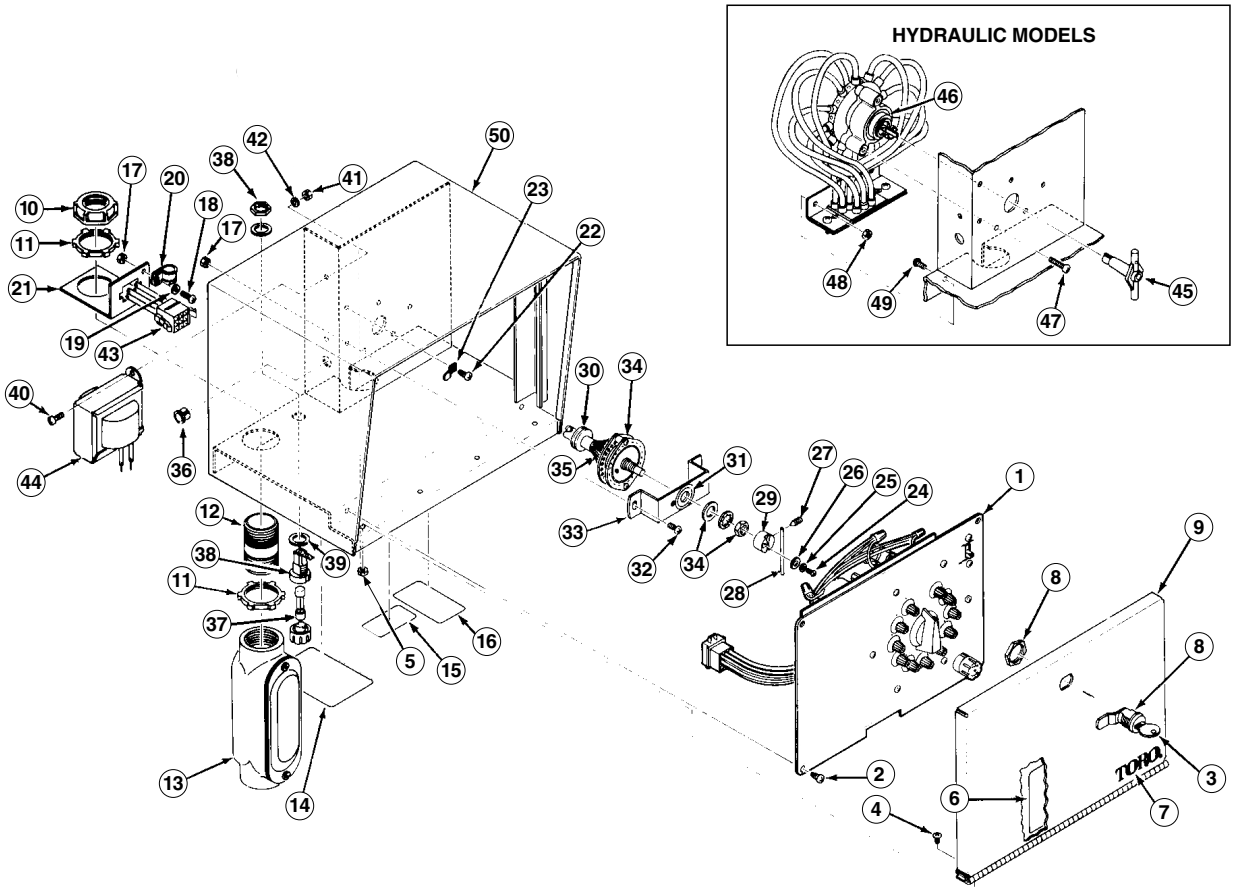

Item No.	Part No.	Description	Quantity Per Assy.
1	- - - - - - -	Timing Mechanism Assembly (See pp 254–255 for Parts Breakdown)	1
2	4-1063	Screw, Tap, #6	4
3	360-0565	Key	2
4	1-7263	Screw, Machine, #6-32 x 1/4	4
5	360-0151	Nut, #6-32 with Washer	4
6	1-7156	Label, Station Location	1
7	1-7395	Decal, Toro Logo	1
8	360-0583	Lock, Door	1
9	9-2068	Door, Cabinet	1
10	1-7417	Bushing, Insulation, 1"	1
11	1-7384	Nut, Lock, 1"	2
12	1-7383	Nipple, 1" x 2"	1
13	1-7382	Box Assy. Conduit	1
14	9-1045	Decal, Electric Input, 120V	1
15	1-3050	Decal, 11 Station, Section	1
16	1-7424	Label, Indicator, Wire, Electric	1
17	360-0151	Nut, Hex, #6-32	1
18	1-7174	Screw, Machine, #6-32 x 1/2"	1
19	1-3086	Washer, Flat, #6	1
20	1-7176	Clamp, Cable, Large	1
21	1-7374	Bracket, Plug	1
22	4-1063	Screw, Tap, #6	1
23	- - - - - - -	Terminal, Male	1
24	1-3082	Screw, Machine, #4-40 x 1/2", Electric	1
25	1-3087	Washer, Brass, #4, Electric	1
26	1-3172	Washer, Flat, #10, Electric	1

Next Page

Item No.	Part No.	Description	Quantity Per Assy.
27	1-7038	Screw, Half-dog Point, Electric	1
28	1-7093	Wire, Drive, Electric	1
29	1-7203	Hub, Switch, Rotary, Electric	1
30	1-7114	Grommet, Rubber, Electric	1
31	1-7356	Decal, Selector Valve, 11 Station., Electric	1
32	1-3076	Screw, Machine, #6-32 x 3/8", Electric	2
33	1-7047	Bracket, Rotary, Electric	1
34	1-7062	Switch, Rotary, Electric	1
35	- - - - - - -	Cable, Multi-Conductor, 18 AWG., Electric	1
36	1-7346	Bushing, Snap, Nylon, Electric	1
37	360-0211	Fuse, 2A, Electric	1
38	1-3061	Holder, Fuse, Electric	1
39	360-0109	Washer, Lock, Int. Tooth, Electric	1
40	360-0248	Screw, Machine, #8-32 x 1", Electric	2
41	360-0249	Nut, Hex, #8, Electric	2
42	360-0250	Washer, Lock, Internal Tooth, Electric	2
43	1-7232	Plug, Connector, Hydraulic	1
44	35-3143	Transformer Assy., 120/24 V a.c., Electric, Domestic and CSA	1
44	9-4022	Transformer Assy., 240/24 V a.c., Electric, Export	1
45	9-3976	Handle, Tee	1
46	9-8490	Valve Assy., Selector, 11 Sta., Hyd., PT	1
46	9-4809	Valve Assy., Selector, 11 Sta., Hyd., NO	1
47	360-0297	Screw, Tap, #6, Hydraulic	3
48	360-0151	Nut, #6-32 with Washer, Hydraulic	2
49	1-3076	Screw, Machine, 6-32 x 3/8", Hydraulic	2
50	9-2067	Cabinet, Wall Mount	1
		SERVICE PARTS AND ASSEMBLIES	
	9-3233	Cabinet Assy., Less TM, NO Hydraulic	1
	9-3743	Cabinet Assy., Less TM, NO Hydraulic, 240V	1
	9-3234	Cabinet Assy., Less TM, Electric	1
	9-3744	Cabinet Assy., Less TM, Electric, 240V	1
	9-4982	Door Assy., Cabinet (Includes Items 4-5)	1
	9-4986	Bracket Assy., Plug	1
	9-3159	Hub Assy., Wire, El	1
	1-7350	Switch Assy., Rotary	1
	9-5153	Fuse Holder Assembly	1
	9-4790	Transformer & Harness Assy., Electric, Domestic and CSA	1
	9-4791	Transformer & Harness Assy., Electric Export	1
	9-4789	Plug Assy.	1
	9-4782	Plug Assy., Hyd.	1
	9-1022	Wire Assy., Red, 15"	
	1-7234	Amp Lock, Term.	
	9-1023	Wire Assy., White	
	9-1024	Wire Assy., Black, 15"	
	9-2945	Tubing, 3/16" x 10", Electric	
	9-2947	Tubing, 3/16" x 12", Electric	
	9-3435	Tubing, 3/16" x 14", Electric	
	9-6791	Connector, Poly 1/4", Electric	
	363-2510	Transformer, Controller, Electric	

Vari-Time II & Vari-Time 4000 Timing Mechanism (Sheet 6 of 6)

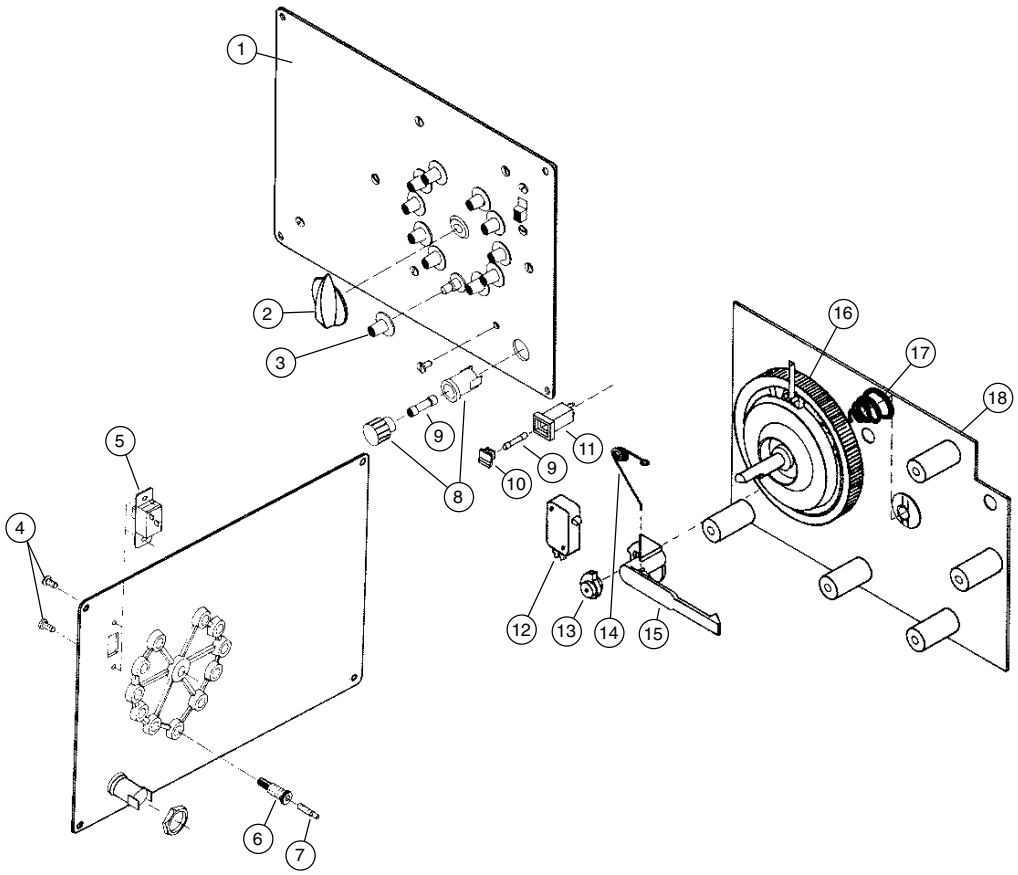

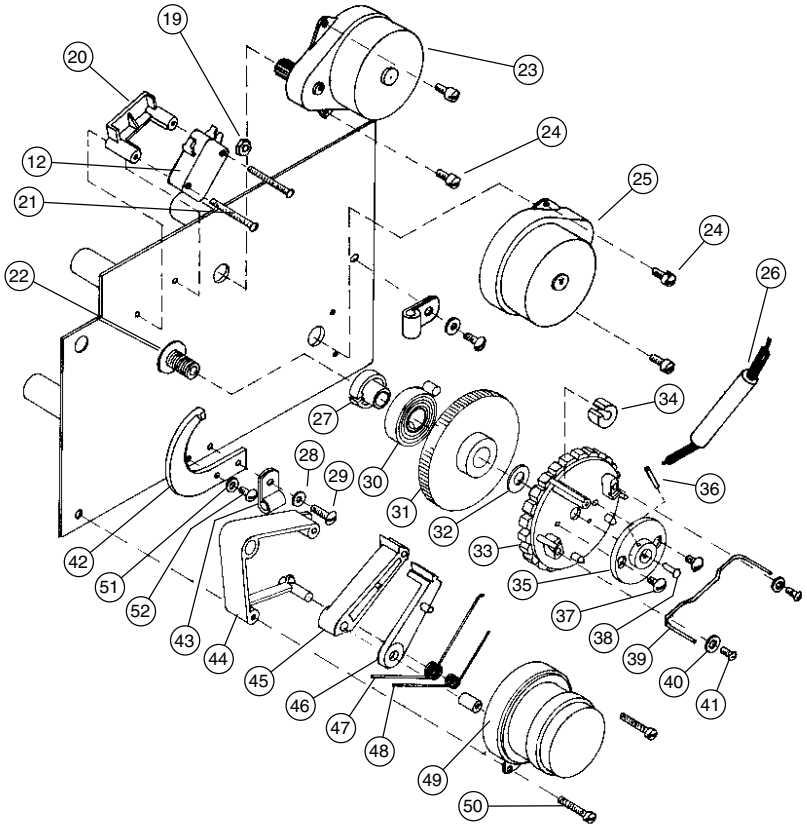

Item No.	Part No.	Description	Quantity Per Assy.
1	9-4751	Front Plate, Molded, VT Sat.	1
2	1-7262	Knob, Station Selector	1
3	1-7307	Knob, Station, 30 Minute	11
4	1-7263	Screw, 6-32 x 1/4"	9
5	1-7117	Switch, Slide	1
6	1-3019	Screw, Adjustment	11
7	1-7038	Screw, 6-32 x 0.44	11
8	1-3061	Fuse Holder, Round	1
9	1-7088	Fuse, 1Amp	1
10	360-0580	Fuse Holder Cap, Square	1
11	360-0599	Fuse Holder, Body	1
12	1-7325	Switch, Micro	1
13	9-2082	Cam	1
14	9-2083	Spring, Arm Return	1
15	9-4059	Syringe Cam Arm	1
16	35-2830	Ring Gear and Hub Assembly	1
17	1-7256	Spring, Return	1
18	9-3759	Rear Plate, 9 Minute Satellite	1
18	9-3750	Rear Plate, 30 Minute Satellite	1
19	360-0151	Nut, 6-32 w/ Lock Washer	3
20	1-7041	Spacer Block, Switch	1
21	1-7085	Screw, 4-40 x 1-1/2"	2
22	1-7377	Screw, Lead	1
23	1-7309	Motor, Index, 120V, 10 RPM	1
23	9-3746	Motor, Index, 240V, 10 RPM	1
24	1-3076	Screw, 6-32 x 3/8"	2
25	9-4304	Motor, Cancel/Syringe, 120V	1
25	9-4305	Motor, Cancel/Syringe, 240V	1
26	9-3539	Heater-Resistor	1
27	1-7003	Bushing	1
28	1-3086	Washer, #6, Brass	4
29	360-0115	Screw, 6/32 x 5/8"	7
30	1-7012	Spring, Power	1
31	1-7035	Wheel, Drive	1
32	1-7036	Washer, Thrust	1
33	1-7037	Wheel, Index	1
34	1-7257	Cam, Actuator	1
35	1-7007	Adjustable Hub	1
36	1-7091	Pin, Roll	1
37	1-7263	Screw, Machine, 6-32 x 1/4"	2
38	1-7008	Screw. Drive	1
39	1-7048	Yoke	1
40	1-3087	Washer, #4, Brass	2
41	1-3082	Screw, 4-40 x 1/4"	2
42	1-7027	Limiter, Recoil	1
43	1-7204	Clamp, Cable	2
44	1-7023	Motor Base	1
45	1-7026	Driving Pawl	1
46	1-7244	Holding Pawl	1
47	1-7015	Spring, Driving Pawl	1
48	1-7243	Spring, Holding Pawl	1
49	1-7291	Motor, Timing, 30 Min Sat., 120V	1
49	1-7292	Motor, Timing, 9 Min Sat., 120V	1
49	9-3797	Motor, Timing, 30 Min Sat., 240V	1
49	9-3798	Motor, Timing, 9 Min Sat., 240V	1
50	1-7086	Screw, 6-32 x 3/4"	2
51	1-3086	Washer, Flat, #6	1
52	1-3078	Screw, Machine, 6-32 x 1/4	1
		SERVICE PARTS AND ASSEMBLIES	
	91-1688	Timing Mechanism Assembly, VT 4000 Sat., 120V , Svc.	
	91-1692	Timing Mechanism Assembly, VT II Sat., 240V, Svc.	
	91-1685	Timing Mechanism Assembly, 30 Min Sat., 120V, Svc.	
	91-1693	Timing Mechanism Assembly, 30 Min Sat., 240V, Svc.	
	9-4610	Index Wheel Assembly (Includes Items 33–41)	
	9-4751	Front Plate Assembly (Includes Items 1, 3, 6 & 7)	