3-Way Actuators

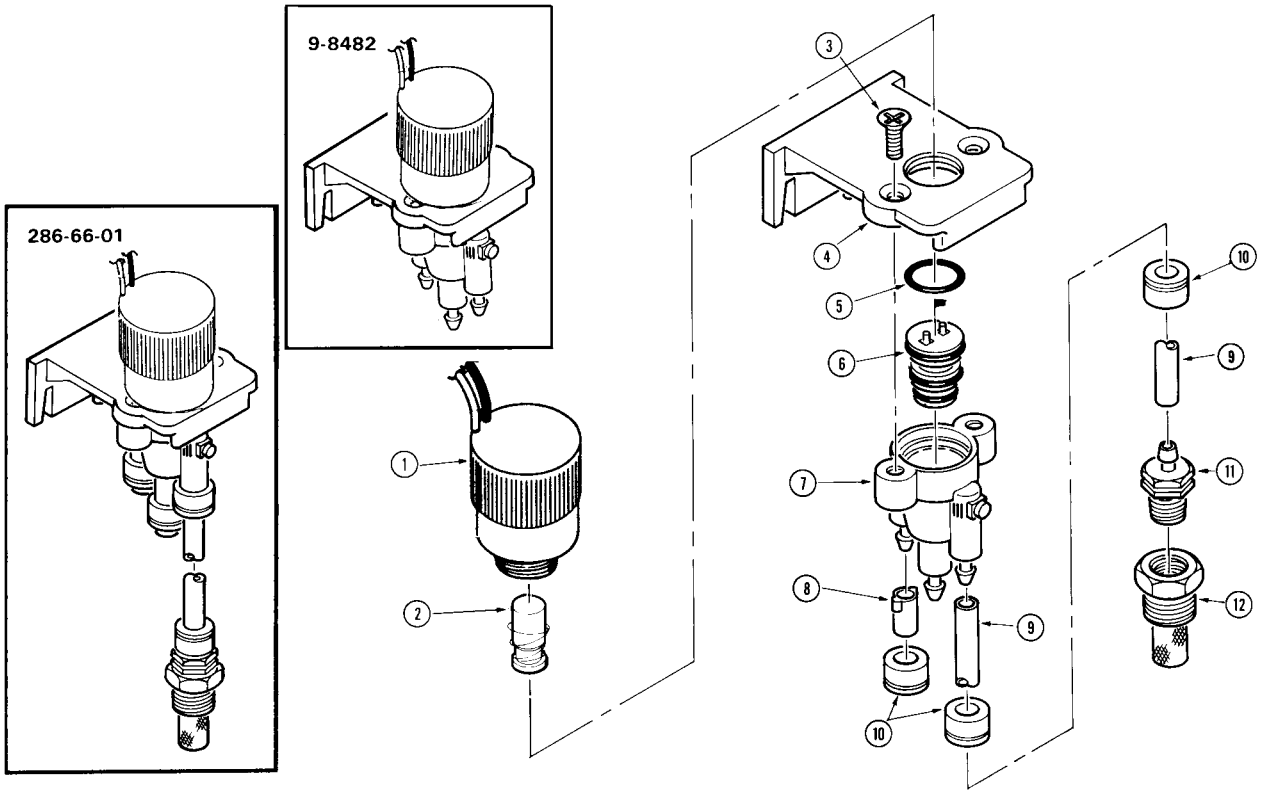

Item No.	Part No.	Description	Quantity Per Assy.
1	89-1673	Solenoid Assy.	1
2	35-4717	Plunger Assy.	1
3	363-1030	Screw, Machine, 10-24 x 1/2"	2
4	9-8055	Bracke, Mounting	1
5	360-0220	O-Ring, 0.070" x 0.551" x 0.691"	1
6	89-3407	Actuator Assy.	1
7	35-0992	Body Assy., Pilot Valve (Used with 286-66-01)	1
7	35-7153	Body Assy., Pilot Valve (Used with 9-8482)	1
8	89-8157	Cap, Poly (Used with 286-66-01)	1
9	9-1482	Tube, 1/4" x 36" (Used with 286-66-01)	1
10	FG	Retainer, Tube (Used with 286-66-01)	3
11	89-8157	Adapter, Poly (Used with 286-66-01)	1
12	995-14	Fitting, Screen, Supply (Used with 286-66-01)	1
		SERVICE ITEMS	
	35-4603	Kit, Service Assy. (Includes Items 3–7) (Used with 286-66-01)	
	35-4602	Kit, Service Assy. (Includes Items 3–7) (Used with 9-8482)	