850S Series Sprinkler

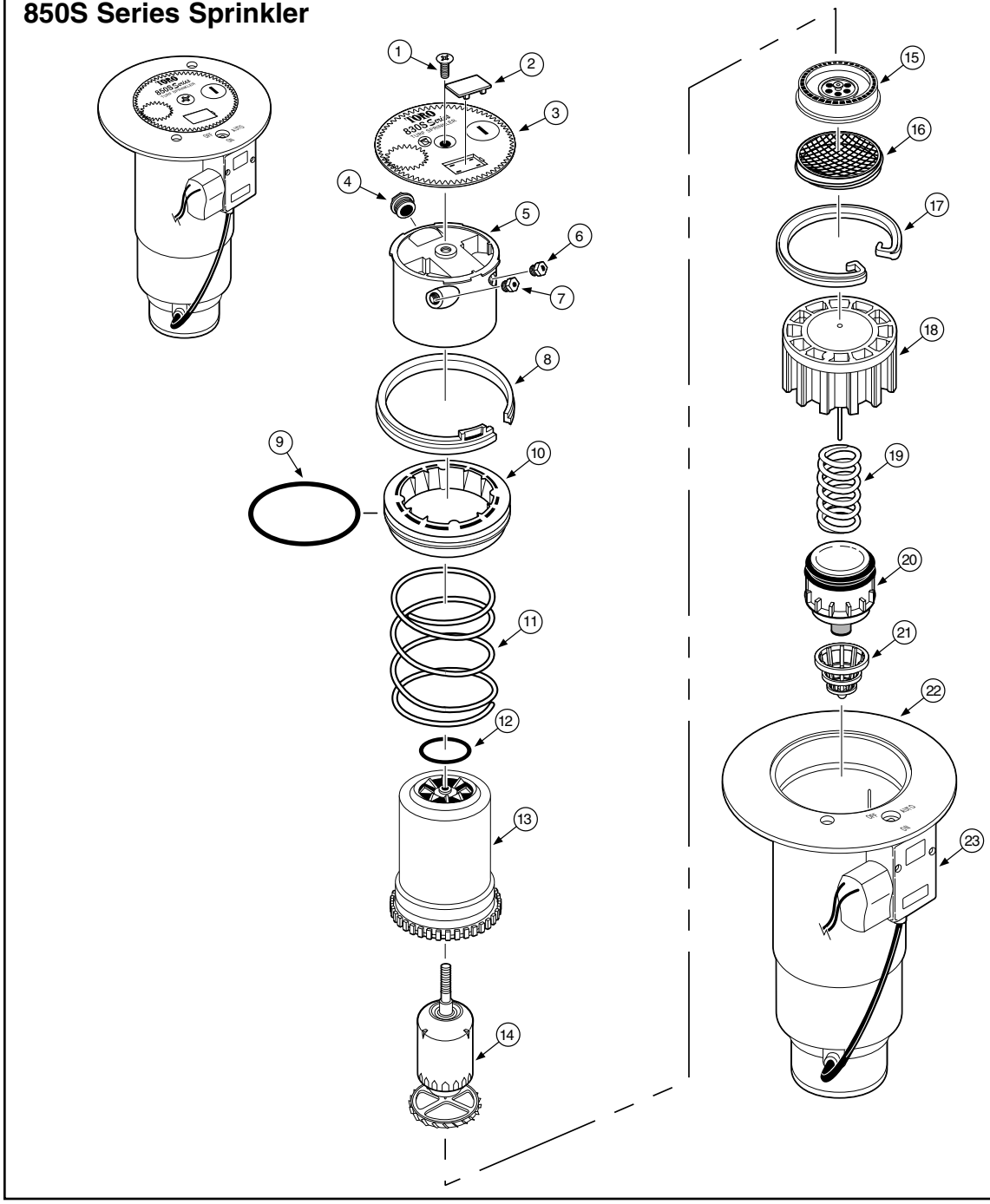

Model Number Information

854S-XX-5XX-E

Arc	Body	Nozzle	Pressure Regulation*	Effluent
4 = Full-circle	01 = NPT, NO Valve-In-Head 02 = NPT, Check-O-Matic 06 = NPT, Electric Valve-In-Head 41 = ACME, NO Valve-In-Head 42 = ACME, Check-O-Matic 46 = ACME, Electric Valve-In-Head 51 = BSP, NO Valve-In-Head 52 = BSP, Check-O-Matic 56 = BSP, Electric Valve-In-Head	1 (Yellow) 2 (Blue) 3 (Brown) 4 (Orange) 5 (Green) 6 (Gray) 7 (Black) 8 (Red) 9 (Beige)	5 = 50 PSI 6 = 65 PSI 8 = 80 PSI 1 = 100 PSI * Pressure Regulation available on Electric VIH models only.	

Note: *For detailed model number availability and ordering information, refer to the Golf Finished Goods Price List (form no. 490-2844).*

Next Page

Item No.	Part No.	Description	Quantity Per Assy.
1	102-0362	Screw, Cap	1
2	89-1589	Plug, Cap	1
3	102-0231	Cap, 850S	1
3	102-1704	Cap, 850S, Effluent	1
4	102-0725	Nozzle, Main, #1 (Yellow)	1
4	102-0726	Nozzle, Main, #2 (Blue)	1
4	102-0727	Nozzle, Main, #3 (Brown)	1
4	102-0728	Nozzle, Main, #4 (Orange)	1
4	102-0729	Nozzle, Main, #5 (Green)	1
4	102-0730	Nozzle, Main, #6 (Gray)	1
4	102-0731	Nozzle, Main, #7 (Black)	1
4	102-0732	Nozzle, Main, #8 (Red)	1
4	102-0227	Nozzle, Main, #9 (Beige)	1
5	102-0955	Nozzle Base Assembly	1
6	102-2136	Nozzle Assembly, Inner, Low-flow (Yellow - Used with #1–4 Main Nozzle)	1
6	102-2135	Nozzle Assembly, Inner, High-flow (White - Used with #5–9 Main Nozzle)	1
7	102-2105	Nozzle Assembly, Intermediate (Blue - Used with #1–2 Main Nozzle)	1
7	102-2106	Nozzle Assembly, Intermediate (Orange - Used with #3–4 Main Nozzle)	1
7	102-2107	Nozzle Assembly, Intermediate (Gray - Used with #5–7 Main Nozzle)	1
7	102-0610	Nozzle Assembly, Intermediate (Red - Used with #7–8 Main Nozzle)	1
7	102-2043	Nozzle Assembly, Intermediate (Beige - Used with #9 Main Nozzle)	1
8	35-6119	Snap Ring, Riser	1
9	363-4103	O-Ring, Body	1
10	102-0136	Retainer, Seal	1
11	102-0151	Spring, Return	1
12	363-4167	O-Ring, Nozzle Base	1
13	102-0203	Riser	1
14	102-0954	Drive Assembly	1
15	102-1939	Stator Assembly, Low-flow (Yellow - Use with #1–4 Main Nozzle)	1
15	102-1940	Stator Assembly, Medium-flow (White - Use with #5–7 Main Nozzle)	1
15	102-1941	Stator Assembly, High-flow (White - Use with #8–9 Main Nozzle)	1
16	102-1715	Screen, Riser	1
17	3-3304	Snap Ring, Valve	1
18	102-0626	Cylinder Assembly	1
19	3-3323	Spring, Valve, Electric & Normally Open	1
19	3-3311	Spring, Valve, Check-O-Matic	1
20	89-0937	Piston Assembly, Electric	1
20	102-1866	Piston Assembly, Check-O-Matic & Normally Open	1
21	102-0785	Screen, Rock, Removable	1
22	102-1153	Body Assembly, Electric, ACME	1
22	102-1151	Body Assembly, Electric, BSP	1
22	102-1149	Body Assembly, Electric, NPT	1
22	102-1141	Body Assembly, Check-O-Matic, ACME	1
22	102-1139	Body Assembly, Check-O-Matic, BSP	1
22	102-1137	Body Assembly, Check-O-Matic, NPT	1
22	102-1147	Body Assembly, Normally Open, ACME	1
22	102-1145	Body Assembly, Normally Open, BSP	1
22	102-1143	Body Assembly, Normally Open, NPT	1
23	- - - - - -	Pilot Valve Assembly (See p. 68)	1
		SERVICE PARTS AND ASSEMBLIES	
	89-1010	Valve Assembly, Electric (Includes Items 18–20)	
	102-1119	Valve Assembly, Check-O-Matic (Includes Items 18–20)	
	102-1121	Valve Assembly, Normally Open (Includes Items 18–20)	
	102-2504	Cap, 850S, w/o Graphics	
	102-2505	Cap, 850S, w/o Graphics, Effluent	
	102-0312	Solenoid Assembly, Low Wattage w/ Surge Protection, Salt Water Tolerant	
	102-2110	Plunger Assembly, Salt Water Tolerant	
	*102-2532	Conversion Assembly, 854S, 51–54	
	*102-2533	Conversion Assembly, 854S, 55–57	
	*102-2534	Conversion Assembly, 854S, 58–59	
		SERVICE TOOLS See p. 69	
		* Order Through Finished Goods Distribution System—Minneapolis	