780 Series

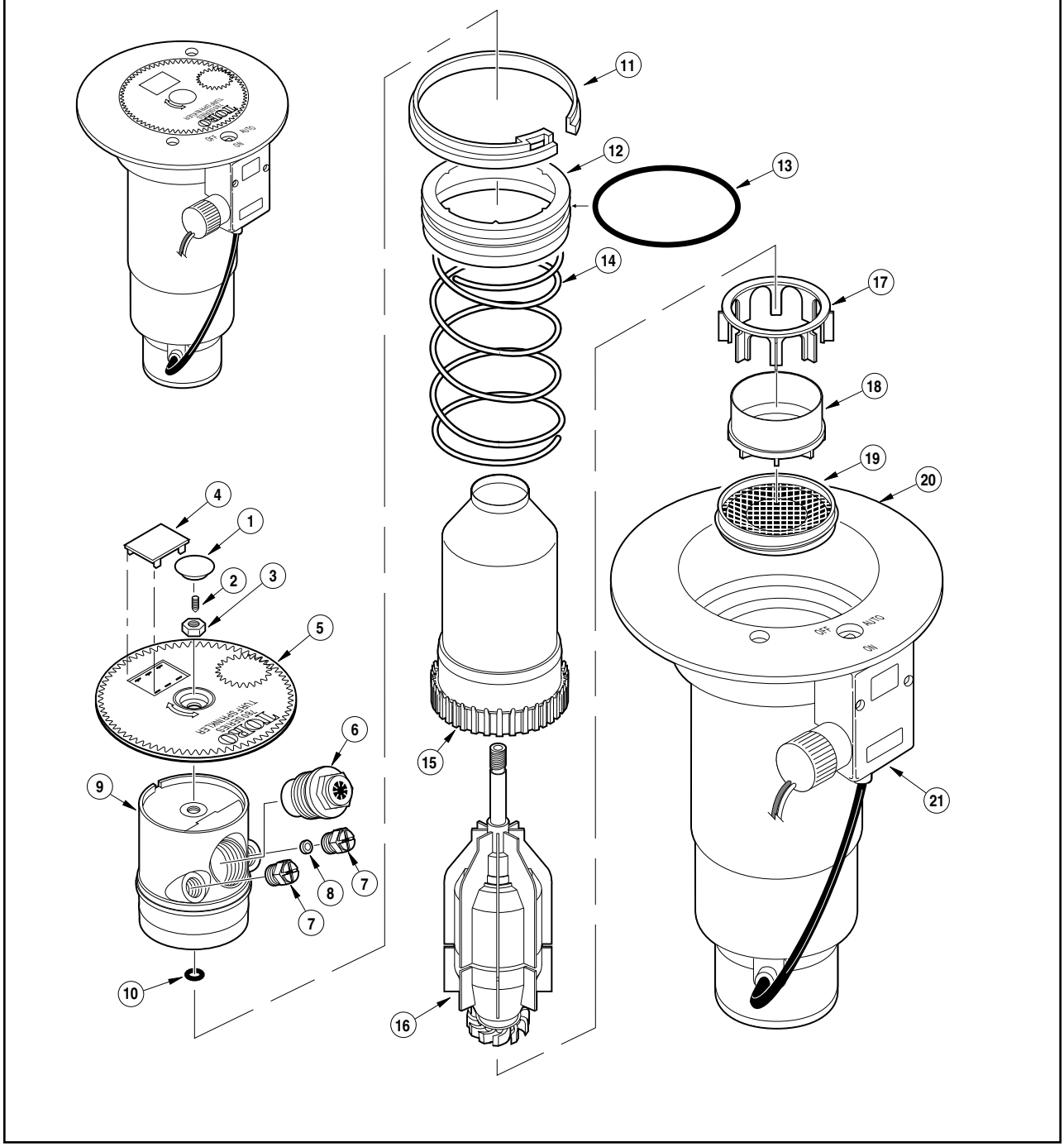

Model Number Information

78X-XX-XXX

Arc	Body		Nozzle	Pressure Regulation*
4 = Full-circle	01 = NPT, NO Valve-In-Head	51 = BSP, NO Valve-In-Head	82	5 = 50 PSI
5 = Adj. Part Circle (30–330°)	02 = NPT, Check-O-Matic	52 = BSP, Check-O-Matic	83	6 = 65 PSI
	06 = NPT, Electric Valve-In-Head	56 = BSP, Electric Valve-In-Head	84	8 = 80 PSI
	§ 08 = NPT, NC Valve-In-Head	§ 58 = BSP, NC Valve-In-Head	85	1 = 100 PSI
	41 = ACME, NO Valve-In-Head		86	* Pressure Regulation available on Electric VIH models only.
	42 = ACME, Check-O-Matic		87	
	46 = ACME, Electric Valve-In-Head		88	
			89	§ Pre-1998 models only.

Next Page

Item No.	Part No.	Description	Quantity Per Assy.
1	89-1220	Plug, Adjustment	1
2	363-3150	Screw, Set, 10-32 x .250 (PC Only)	1
3	363-4039	Nut, Jam, 5/16-24 w/Thread Locker	1
4	89-1589	Plug, Cap	1
5	89-1584	Cap, 780	1
6	89-1925	Nozzle, Main, 82 Yellow	1
6	89-1926	Nozzle, Main, 83 Blue	1
6	89-1927	Nozzle, Main, 84 Brown	1
6	89-1928	Nozzle, Main, 85 Orange	1
6	89-1929	Nozzle, Main, 86 Green	1
6	89-1930	Nozzle, Main, 87 Gray	1
6	89-1931	Nozzle, Main, 88 Black	1
6	89-4655	Nozzle, Main, 89 Red	1
7	89-4651	Nozzle, Inner, 82 Yellow	2
7	89-3942	Nozzle, Inner, 83 Blue	2
7	89-4652	Nozzle, Inner, 84 Brown	2
7	89-3729	Nozzle, Inner, 85 Orange	2
7	89-4653	Nozzle, Inner, 86 Green	2
7	89-1879	Nozzle, Inner, 87 Gray	2
7	89-4654	Nozzle, Inner, 88 Black	2
7	89-1878	Nozzle, Inner, 89 Red	2
8	89-4649	Restrictor, (82 & 83 Black)	1
8	89-4650	Restrictor, (84-89 White)	1
9	89-1906	Nozzle Base Assy., 760 / 780	1
9	102-0057	Nozzle Base Assy., 760 / 780 w/Back Nozzle (Includes 89-3729 Nozzle, Inner 85 Orange and 89-4650 Restrictor)	1
10	360-0107	O-Ring	1
11	35-6119	Snap Ring	1
12	89-4353	Seal/Retainer Assy.	1
13	363-3208	O-Ring	1
14	89-6307	Spring, Return	1
15	89-6361	Riser Assy., 780	1
16	89-8985	Drive Assy., PC	1
16	89-8986	Drive Assy., FC	1
17	89-1958	Stator Support	1
18	89-1957	Stator, Variable	1
19	89-1588	Screen, 760 & 780	1
20	- - - - -	Body Assy.(See pp. 66 & 67)	1
21	- - - - -	Pilot Valve Assembly (See p. 68)	1
		SERVICE PARTS AND ASSEMBLIES	
	89-4735	Yardage Marker, Yellow (10 sheets per pack)	
	89-4736	Yardage Marker, Lavender (10 sheets per pack)	
	89-4719	Effluent Marker, Lavender (100 per pack)	
	*89-6989	784-82 Full-circle Conversion Assembly w/82 Nozzle	
	*89-6990	784-83 Full-circle Conversion Assembly w/83 Nozzle	
	*89-6991	784-84 Full-circle Conversion Assembly w/84 Nozzle	
	*89-6992	784-85 Full-circle Conversion Assembly w/85 Nozzle	
	*89-6993	784-86 Full-circle Conversion Assembly w/86 Nozzle	
	*89-6994	784-87 Full-circle Conversion Assembly w/87 Nozzle	
	*89-6995	784-88 Full-circle Conversion Assembly w/88 Nozzle	
	*89-6996	784-89 Full-circle Conversion Assembly w/89 Nozzle	
	*89-6997	785-82 Part-circle Conversion Assembly w/82 Nozzle (Ribless Body)	
	*89-6998	785-83 Part-circle Conversion Assembly w/83 Nozzle (Ribless Body)	
	*89-6999	785-84 Part-circle Conversion Assembly w/84 Nozzle (Ribless Body)	
	*89-7000	785-85 Part-circle Conversion Assembly w/85 Nozzle (Ribless Body)	
	*89-7001	785-86 Part-circle Conversion Assembly w/86 Nozzle (Ribless Body)	
	*89-7002	785-87 Part-circle Conversion Assembly w/87 Nozzle (Ribless Body)	
	*89-7003	785-88 Part-circle Conversion Assembly w/88 Nozzle (Ribless Body)	
	*89-7004	785-89 Part-circle Conversion Assembly w/89 Nozzle (Ribless Body)	
	*89-8038	785-82 Part-circle Conversion Assembly w/82 Nozzle (Ribbed Body)	
	*89-8039	785-83 Part-circle Conversion Assembly w/83 Nozzle (Ribbed Body)	
	*89-8040	785-84 Part-circle Conversion Assembly w/84 Nozzle (Ribbed Body)	
	*89-8041	785-85 Part-circle Conversion Assembly w/85 Nozzle (Ribbed Body)	
	*89-8042	785-86 Part-circle Conversion Assembly w/86 Nozzle (Ribbed Body)	
	*89-8043	785-87 Part-circle Conversion Assembly w/87 Nozzle (Ribbed Body)	
	*89-8044	785-88 Part-circle Conversion Assembly w/88 Nozzle (Ribbed Body)	
	*89-8164	785-89 Part-circle Conversion Assembly w/89 Nozzle (Ribbed Body)	
	89-8288	Cap, Effluent	
		SERVICE TOOLS	
		See p. 69	
		* Order Through Finished Goods Distribution System—Minneapolis	

780 Series Conversion Assembly

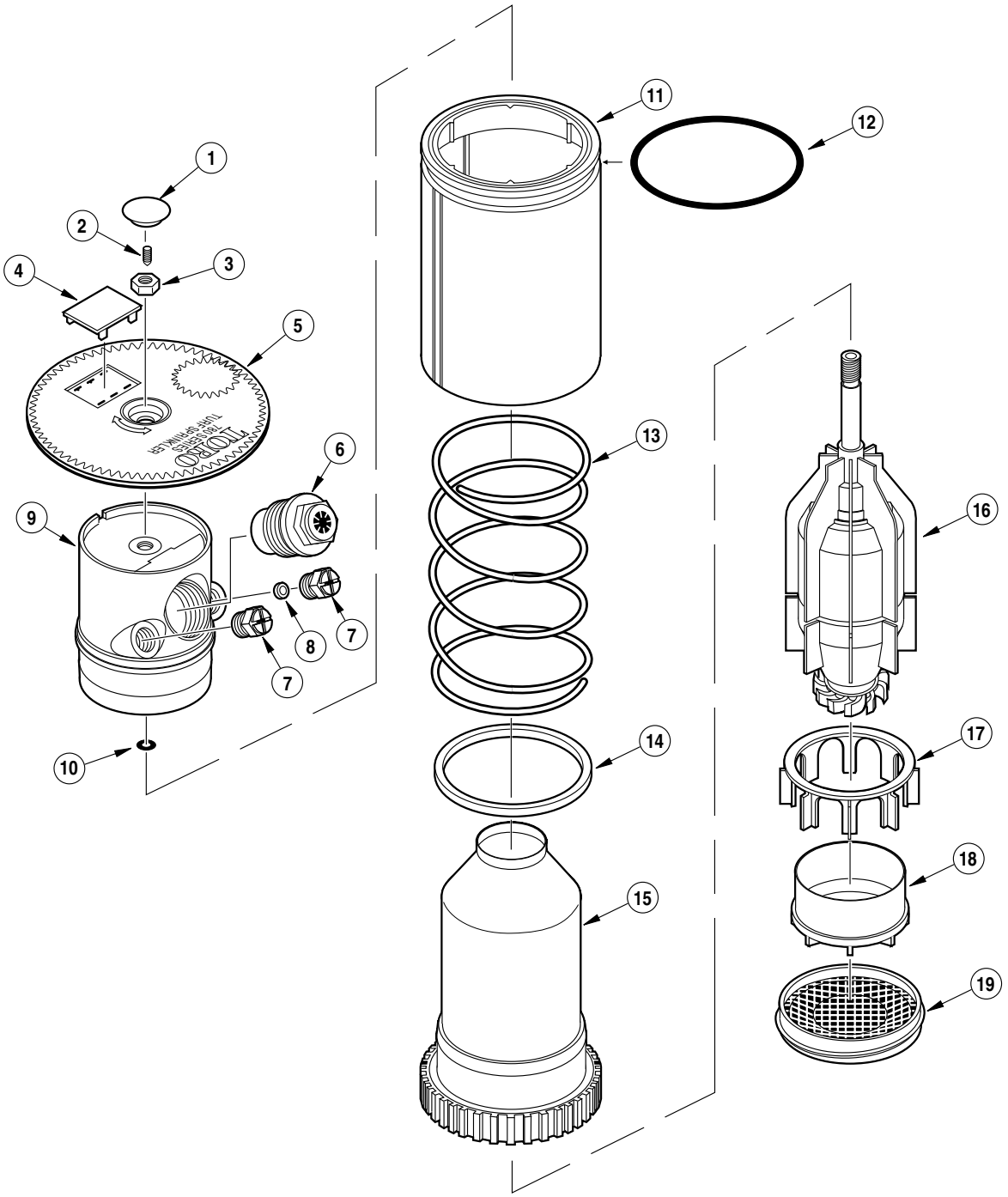

Item No.	Part No.	Description	Quantity Per Assy.
1	89-1220	Plug, Adjustment	1
2	363-3150	Screw, Set, 10-32 x .250 (PC Only)	1
3	363-4039	Nut, Jam, 5/16-24 w/Thread Locker	1
4	89-1589	Plug, Cap	1
5	89-1584	Cap, 780	1
6	89-1925	Nozzle, Main, 82 Yellow	1
6	89-1926	Nozzle, Main, 83 Blue	1
6	89-1927	Nozzle, Main, 84 Brown	1
6	89-1928	Nozzle, Main, 85 Orange	1
6	89-1929	Nozzle, Main, 86 Green	1
6	89-1930	Nozzle, Main, 87 Gray	1
6	89-1931	Nozzle, Main, 88 Black	1
6	89-4655	Nozzle, Main, 89 Red	1
7	89-4651	Nozzle, Inner, 82 Yellow	2
7	89-3942	Nozzle, Inner, 83 Blue	2
7	89-4652	Nozzle, Inner, 84 Brown	2
7	89-3729	Nozzle, Inner, 85 Orange	2
7	89-4653	Nozzle, Inner, 86 Green	2
7	89-1879	Nozzle, Inner, 87 Gray	2
7	89-4654	Nozzle, Inner, 88 Black	2
7	89-1878	Nozzle, Inner, 89 Red	2
8	89-4649	Restrictor, (82 & 83 Black)	1
8	89-4650	Restrictor, (84-89 White)	1
9	89-1906	Nozzle Base Assy., 760 / 780	1
9	102-0057	Nozzle Base Assy., 760 / 780 w/Back Nozzle (Includes 89-3729 Nozzle, Inner 85 Orange and 89-4650 Restrictor)	1
10	360-0107	O-Ring	1
11	89-7568	Sleeve, Retainer, O-Ring, 780 Conversion	1
12	363-3208	O-Ring	1
13	89-6307	Spring, Return	1
14	89-7569	Seal, Riser	1
15	89-6360	Riser Assy., 760	1
16	89-8985	Drive Assy., PC	1
16	89-8986	Drive Assy., FC	1
17	89-1958	Stator Support	1
18	89-1957	Stator, Variable	1
19	89-1588	Screen, 760 & 780	1
		SERVICE PARTS AND ASSEMBLIES	
	89-8288	Cap, Effluent	
		SERVICE TOOLS	
		See p. 69	