670 Series

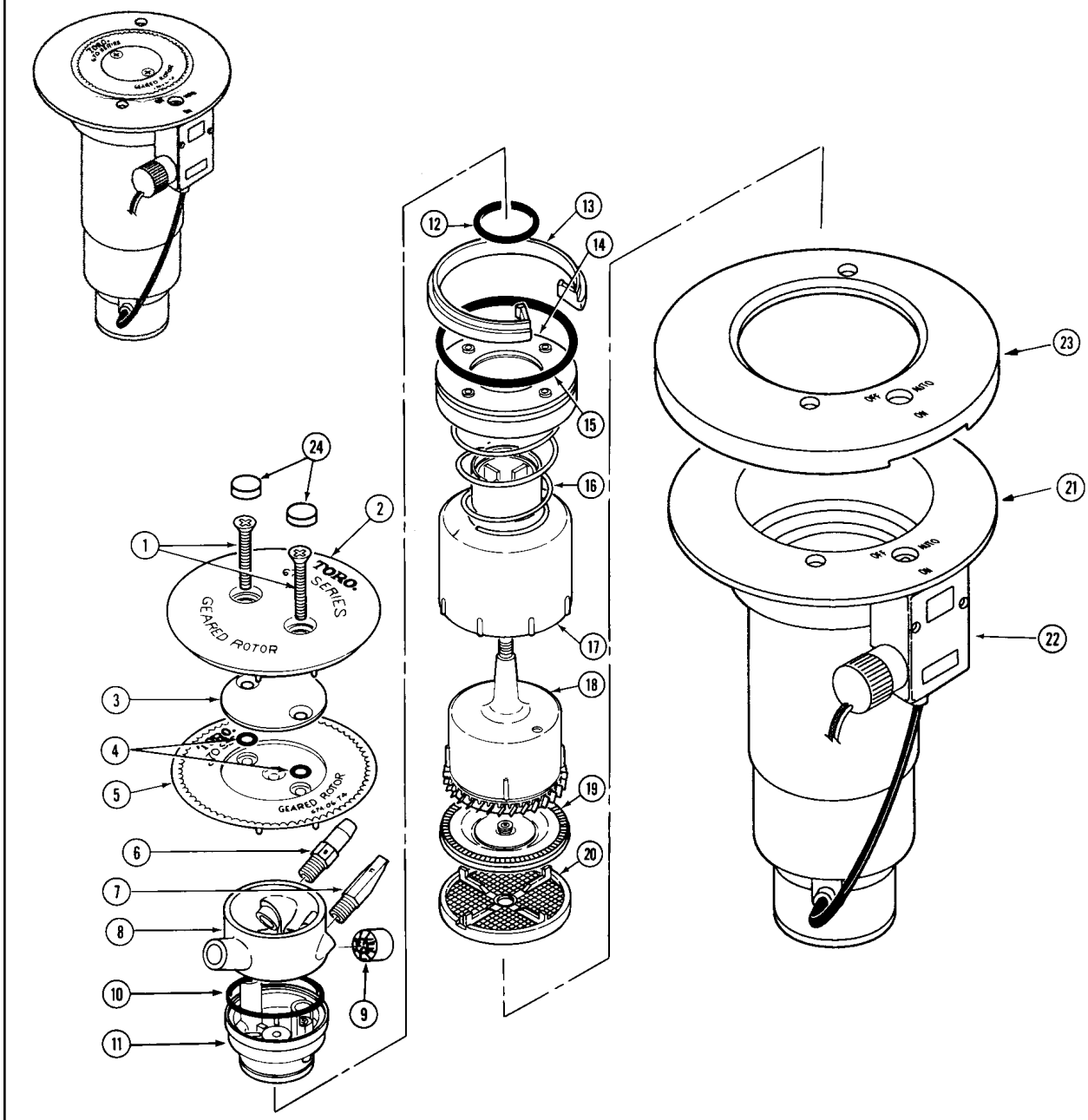

Model Number Information

674-XX-XXX

Arc	Body	Nozzle	Pressure Regulation *
4 = Full-circle	01 = NPT, NO Valve-In-Head	70	6 = 65 PSI
	02 = NPT, Check-O-Matic	71	8 = 80 PSI
	06 = NPT, Electric Valve-In-Head	72	1 = 100 PSI
	08 = NPT, NC Valve-In-Head	73	
	51 = BSP, NO Valve-In-Head	74	
	52 = BSP, Check-O-Matic		
	56 = BSP, Electric Valve-In-Head		
	58 = BSP, NC Valve-In-Head		

* Pressure Regulation available on Electric & NC VIH models only.

Next Page

Item No.	Part No.	Description	Quantity Per Assy.
1	363-1571	Screw, Machine, 1/4-20 X 2" SST	2
2	9-5633	Cap Assy, Rubber Cover	1
3	9-3735	Plate, Cap, Insert	1
4	360-0107	O-Ring, .070" x .301" x .441"	2
5	35-0530	Cap, Sprinkler, 670	1
6	9-2793	Nozzle, "0" Intermediate	1
7	9-7177	Nozzle, "F" Inner	1
8	9-7962	Ring, Nozzle Assy., #70 (5/16")	1
8	9-7963	Ring, Nozzle Assy., #71 (11/32")	1
8	9-7964	Ring, Nozzle Assy., #72 (3/8")	1
8	9-7965	Ring, Nozzle Assy., #73 (13/32")	1
8	9-7966	Ring, Nozzle Assy., #74 (7/16")	1
9	89-5813	Straightener, Stream	1
10	360-0398	O-Ring, .070" x 1.989" x 2.129"	1
11	89-8923	Kit, Base, Nozzle (Includes Items 1 and 10–12)	1
12	9-5075	O-Ring, Housing, Outer	1
13	3-3308	Ring, Snap, Head	1
14	9-5055	Spring Retainer & Plate Assembly	1
15	363-3208	O-Ring, .125" x 3" x 3.250"	1
16	9-3737	Spring, Return	1
17	9-3874	Drive Assy., Outer Housing	1
18	9-3908	Drive Assy. (Includes Item 17)	1
19	9-4091	Stator, Fixed (for #70 & #71 Nozzle)	1
19	9-4529	Stator, Variable (for #72, #73 and #74 Nozzle)	1
20	35-3611	Screen, Debris	1
21	- - - - -	Body Assy.(See pp. 66 & 67)	1
22	- - - - -	Pilot Valve Assembly (See p. 68)	1
23	9-5355	Cover, Flange, Rubber	1
24	3-2518	Plug, Cap, Rubber	1
		SERVICE PARTS AND ASSEMBLIES	
	3-2518	Plug, Cap, Rubber	
	9-6916	Conversion Assy., 674-70 (Includes Items 1,& 3–20)	
	9-3904	Conversion Assy., 674-71 (Includes Items 1, & 3–20)	
	9-3901	Conversion Assy., 674-72 (Includes Items 1, & 3–20)	
	9-3902	Conversion Assy., 674-73 (Includes Items 1, & 3–20)	
	9-3903	Conversion Assy., 674-74 (Includes Items 1, & 3—20)	
	89-0475	670 Nozzle Assy., #70 (Includes Items 1, & 3–12)	
	9-7415	670 Nozzle Assy., #71 (Includes Items 1, & 3–12)	
	9-7416	670 Nozzle Assy., #72 (Includes Items 1, & 3–12)	
	9-7417	670 Nozzle Assy., #73 (Includes Items 1, & 3–12)	
	9-7418	670 Nozzle Assy., #74 (Includes Items 1, & 3–12)	
	9-7271	Adapter, Tubing, Oversized	
	35-3599	Straightener, Stream, Debris Resistant	
	670-01	Kit, Cover, Rubber (Includes Items 2, 23 & 24)	
	102-0693	Adapter, Poly, 1/4", COM	
		SERVICE TOOLS	
		See p. 69	